How to Adjust the Cutting Force and the Blade Length for half cutting

1. Basic knowledge for the half cutting material (Cutting film)

The half (kiss) cutting media is made by the two layers which are the surface material and the base material.

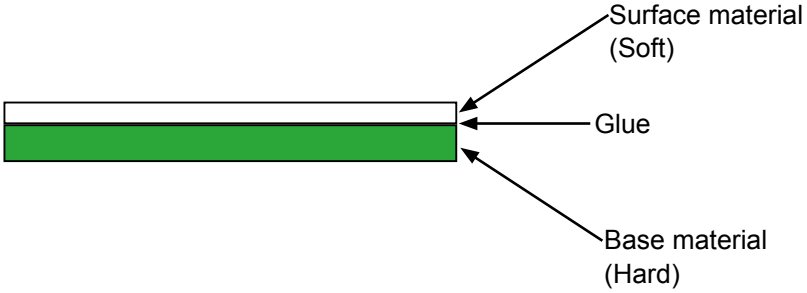

Basically the base material is harder than the surface material.

When the hard material is cutting it needs to have more cutting force than soft material.

Therefore when the cutting force is higher to cut the base material it will cut through the surface material and the base material.

2. Regarding the cutting force for the half (kiss) cutting material

The cutting force is not for the surface material when the half (kiss) cutting is performing.

The cutting force must adjust for the base material for the half (kiss) cutting.

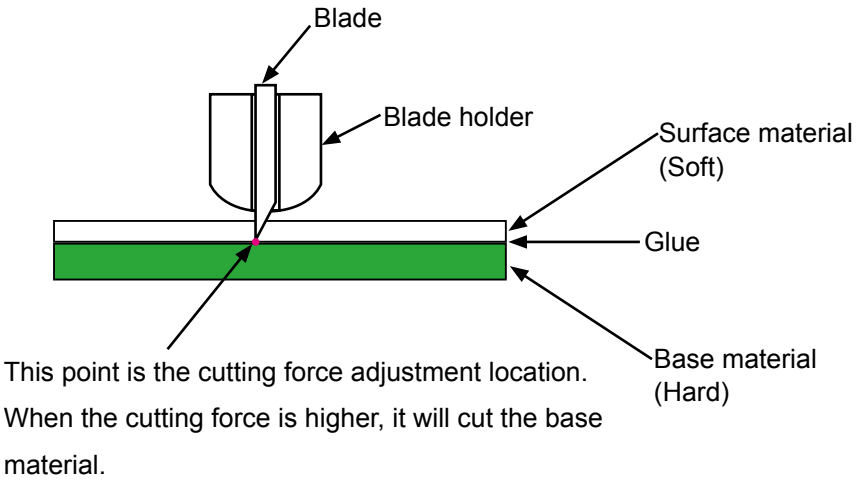

When it cut through the base material, the cutting force is too high.

Therefore when it cut through the base material, it should not reduce the blade length, it must reduce the cutting force first.

The base material will not cut when it does not have cutting force to cut the base material.

3. Regarding the blade length for the half (kiss) cutting material

Actually the cutting mat is not flat at whole area.

And the thickness of cutting film will not be even. (This depends on quality of cutting film.)

When the blade length is correct, the bottom of blade holder will not touch to the surface of surface material.

And the cutting force is at the surface of base material (Red points) as shown in the picture below.

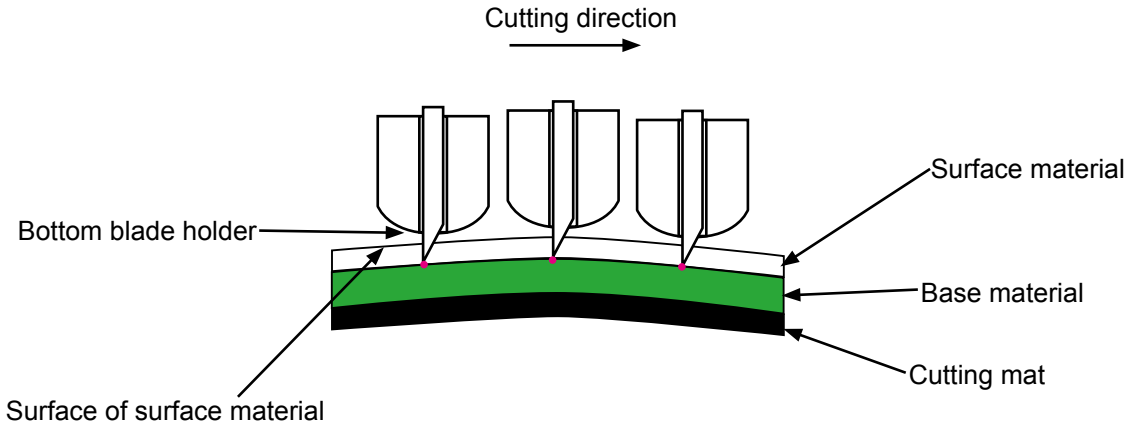

When the blade length is short, it makes uneven cutting area as shown in the picture below, because there is not gap between the bottom blade holder and the surface of surface material.

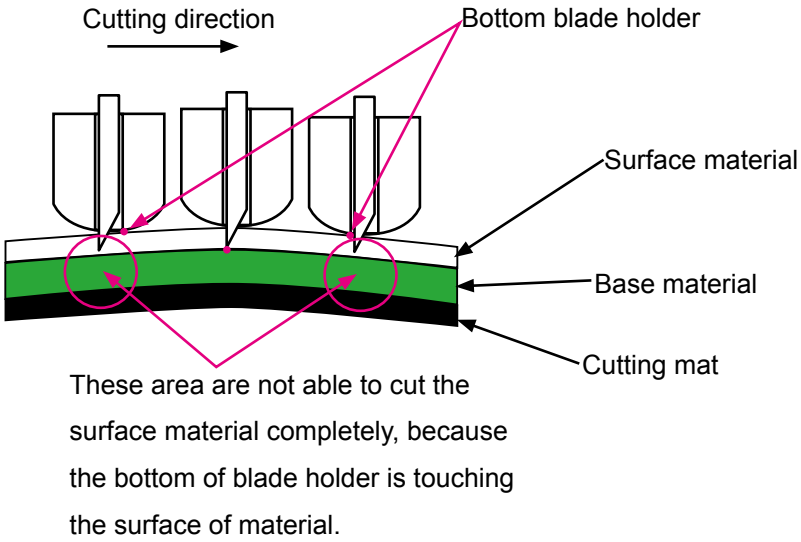

The blade length must have enough length to cut the surface material and the bottom of blade holder should not touch to the surface material.

When it has uneven cutting area, the blade length needs to increase until the bottom of plunger is not touched to the surface material.

The cutting force adjustment will not solve the uneven cutting issue.

The Graphtec cutting plotter is not adjusting the cutting depth by the blade length when the tool goes down.

The cutting depth is adjusting by the cutting force, therefore it cuts surface material only, even if the cutting mat height did not evenly.

4. How to Adjust Blade length and the cutting Force

(1) Confirm the blade holder is installed to the correct position.

When the blade holder is installed, the blade holder stopper must be positioned onto the flange of blade holder as shown in the picture below.

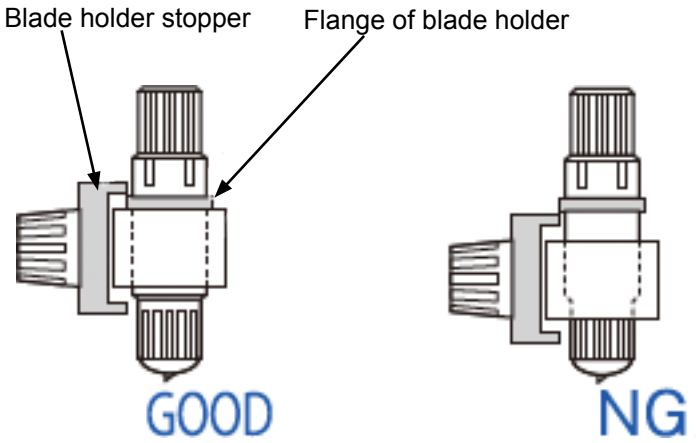

When the stopper position was incorrect the tip of blade does not go down to the surface of media, because the tool height becomes about 2 mm higher from the correct height.

(2) Roughly adjust the blade length to the 1 mm.

(3) Perform the square and triangle of test cutting.

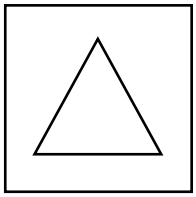

(4) Peel off the surface of cutting film from the test cutting.

(5) Confirm the base material is not cut though completely.

When the tracing cutting line is on the base material, and it does not cut through the base material completely, the cutting force is adjusting correctly.

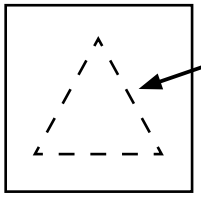

Confirm the base material is not cut completely.
When there is a tracing pattern on the base material, the cutting force is correct.

When the base material has cut though completely, the cutting force is too high.

Reduce the cutting force until the base material is not cut.

When the surface material is not cut completely, the cutting force is too low or the blade length is too short.

Increase the blade length first.

And then confirm the base material is not cut completely.

When the surface material is not cut completely even if the blade length was increased, the cutting force is too low.

Increase the cutting force until the base material is not cut completely.

(6) After the cutting force was adjusted correctly, cut the cutting film at the entire area.
If there is uneven cutting area, increase the blade length until it cut the surface material completely.
If there is no uneven cutting area, perform the following procedure of fine adjustment of blade length.
Reduce the blade length, and then cut the cutting film at the entire area.
And then if there is uneven cutting area, increase the blade length until it cut the surface material completely.

5. Regarding the blade length, the cutting force, and the cutting speed

- When the cutting force is set correctly, the base material will not cut completely.
  And the cutting mat will not be damaged.
- When the cutting mat was damaged, the cutting force is too high.
  Reduce the cutting force.
- When the cutting force was increased, and then it does not cut the surface material completely.
  This times, the blade length is not enough.
  Increase the blade length.
  And if it cut the base material completely, reduce the cutting force.
- When there is uneven cutting area, the blade length is not enough.
  Increase the blade length.
- When the thin cutting film (specially car film) is cutting, the base material is very soft and thickness of base material is thin. And weight-ratio of material is heavy.
  Therefore the cutting force must be low.
  And the cutting speed must be low, otherwise the surface material will not cut evenly, even if the cutting force was adjusted correctly, because the blade angle and the surface of cutting film will be changed with the cutting speed.
  And it will be stacked because the thin material is not strong enough to keep the tracking position.
  The tracking position will be shifted by inertia of material when it stops the feeding, therefore when the thin and heavy material is cutting, the cutting speed must be low.